GY

GY/T

Audio definition model

2024 08 1 2024 08 1

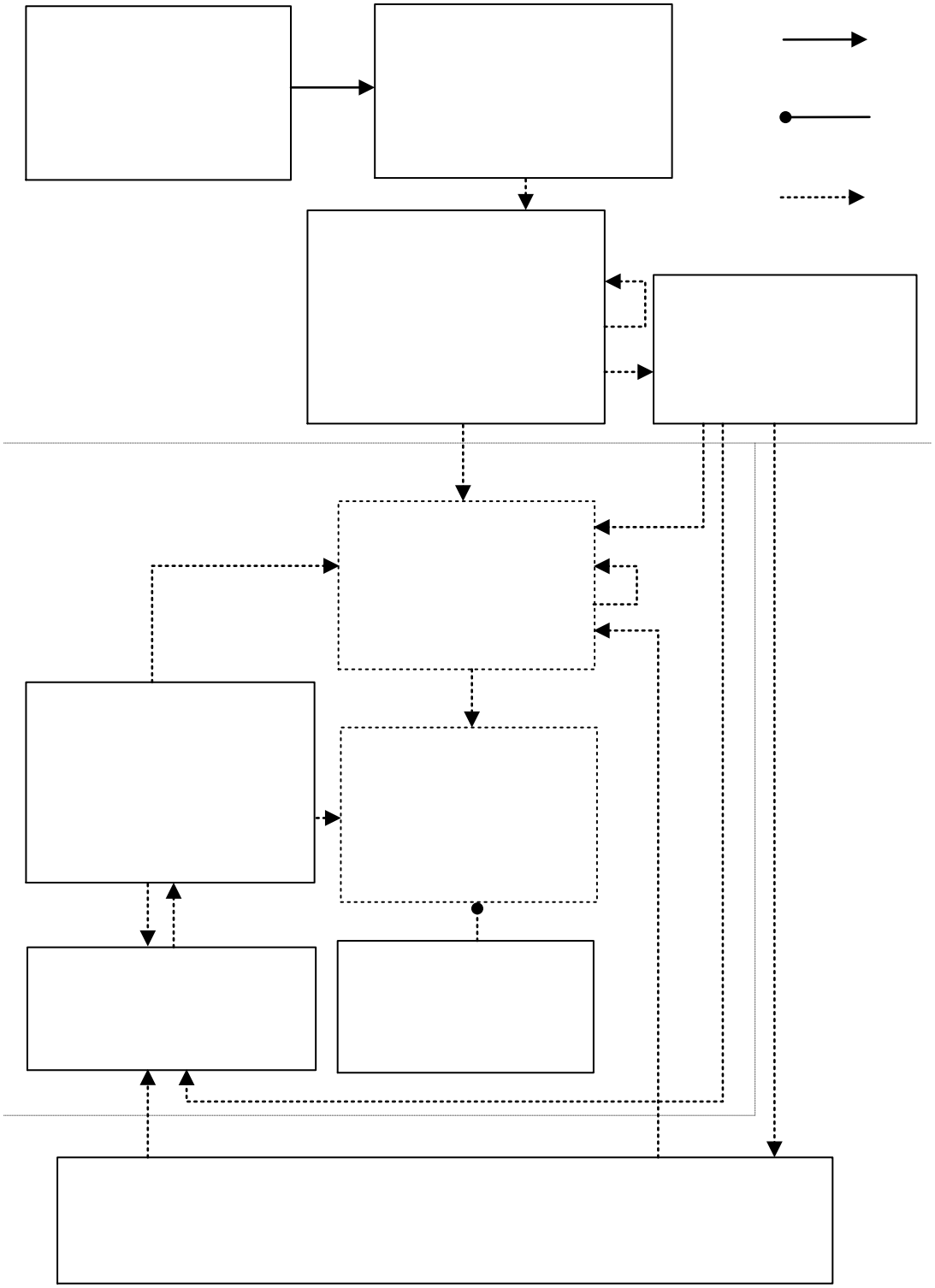

	•	•		
	•		•	
	•			•
•				

					–	
					–	
					–	

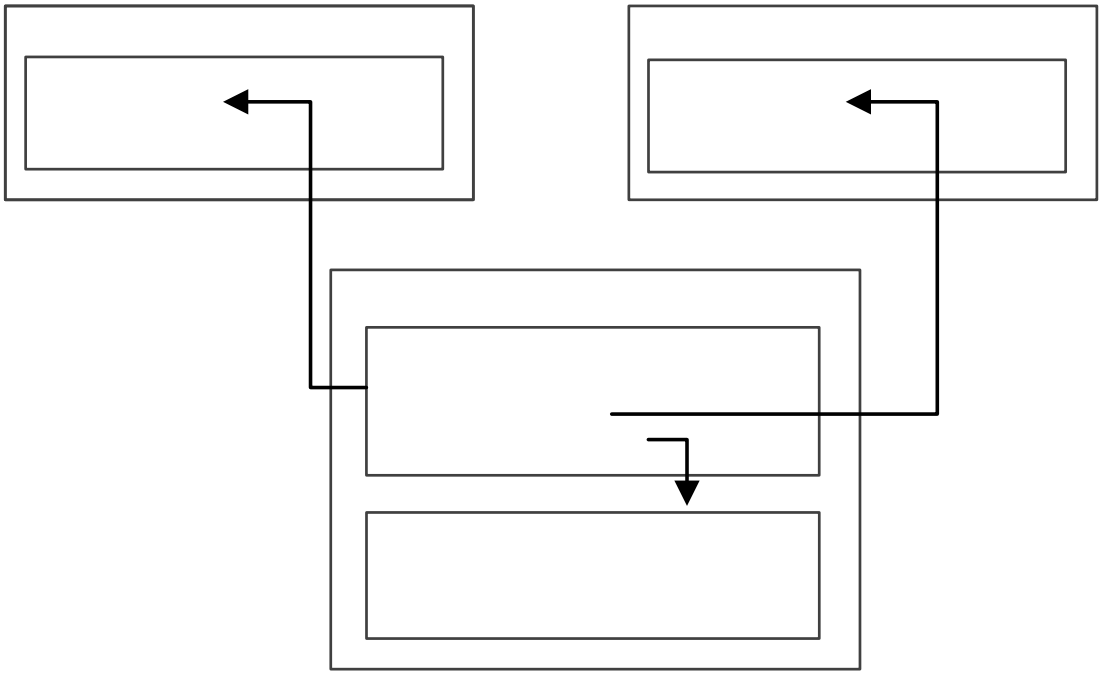

-n <</LaO-6(o)7184 370.29 467.2 1840.24 57 -n <</LaO-6(o)7184 370.29 467.2 1840.24 57

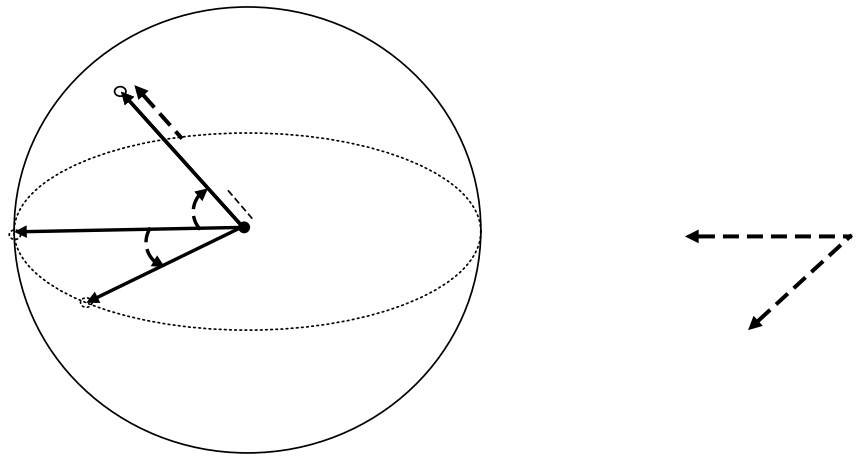

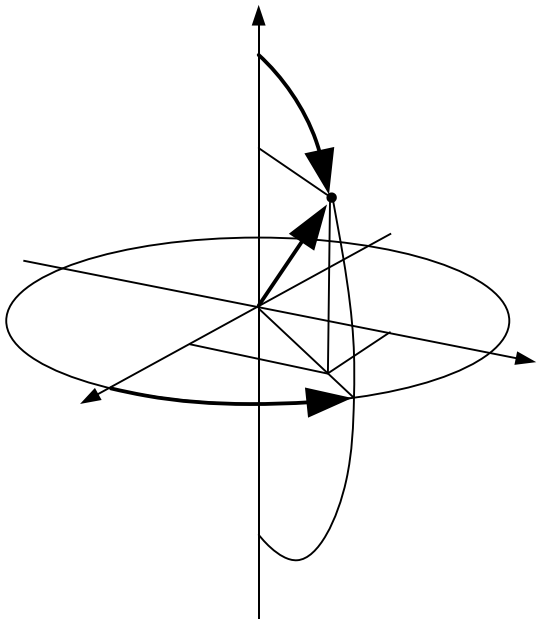

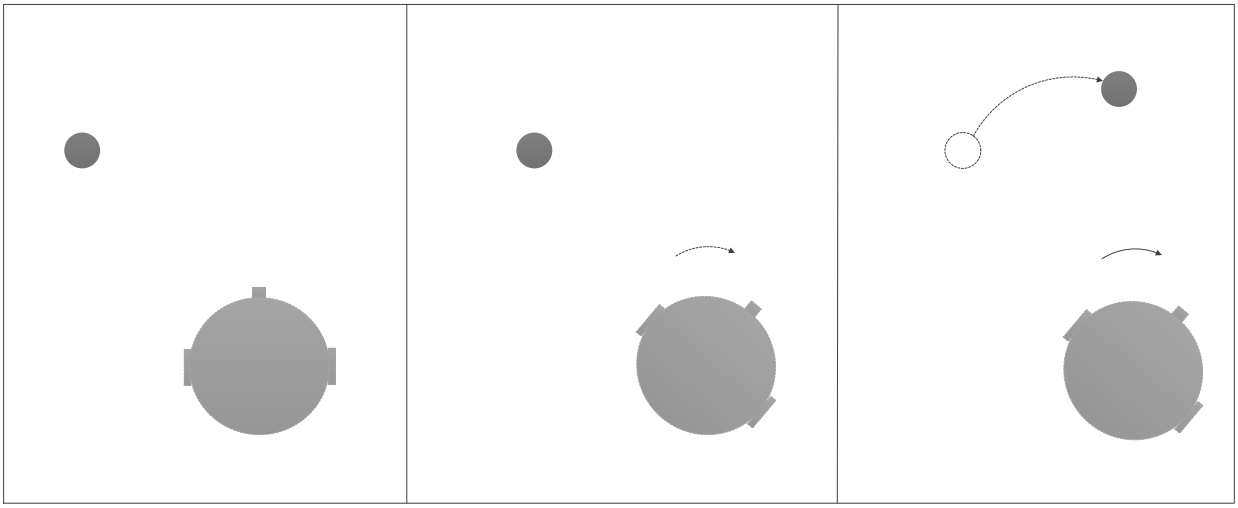

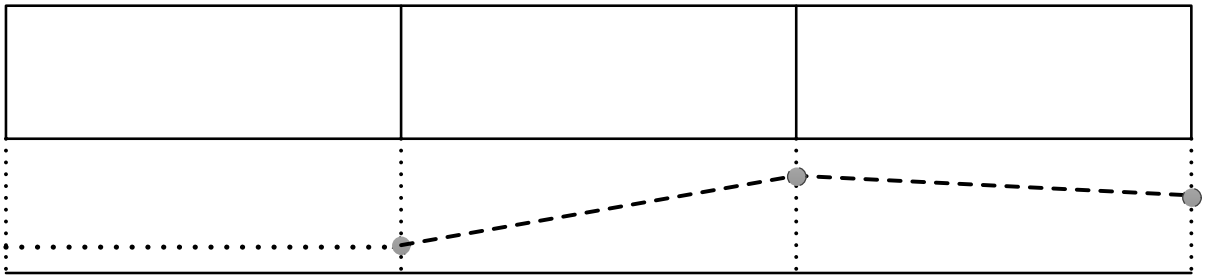

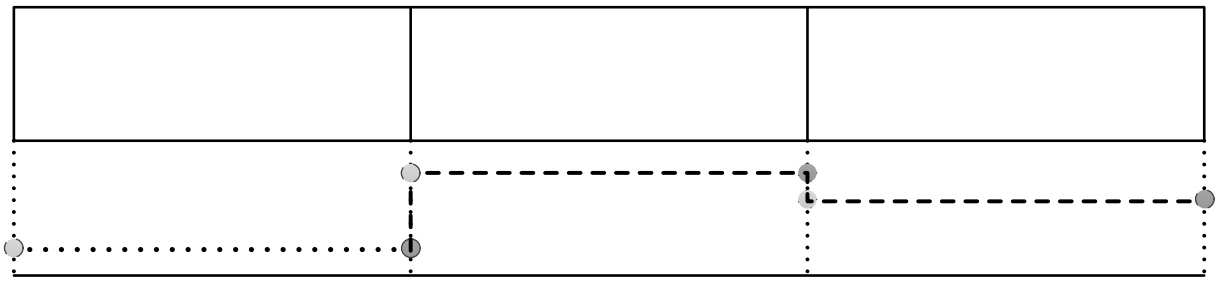

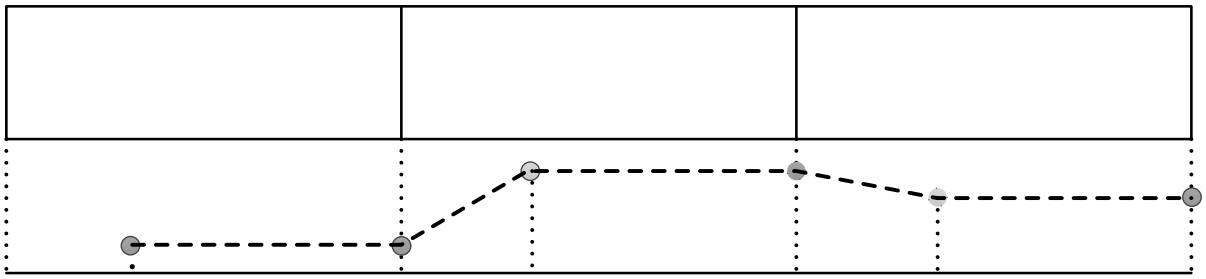

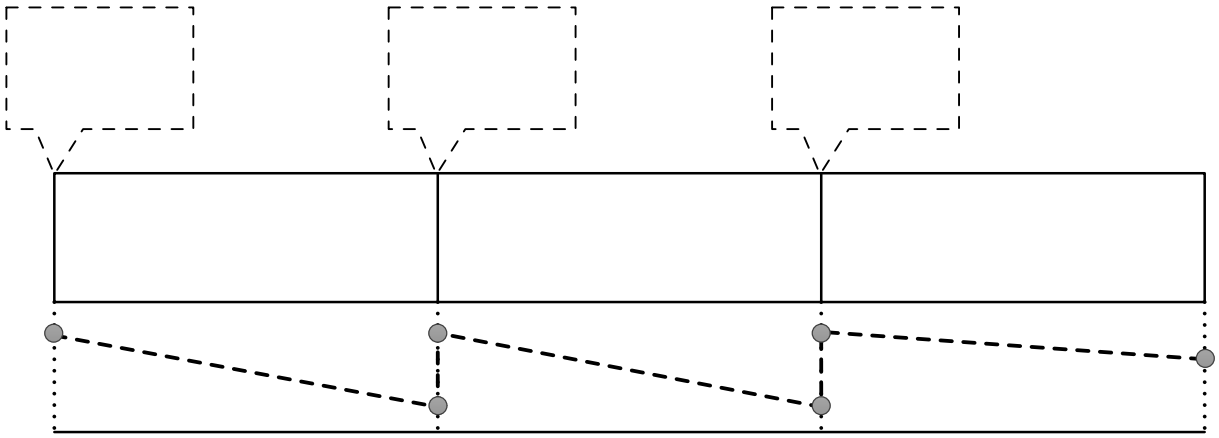

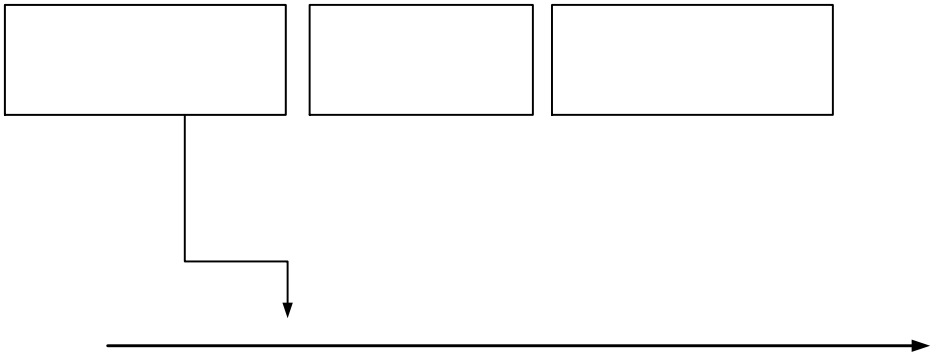

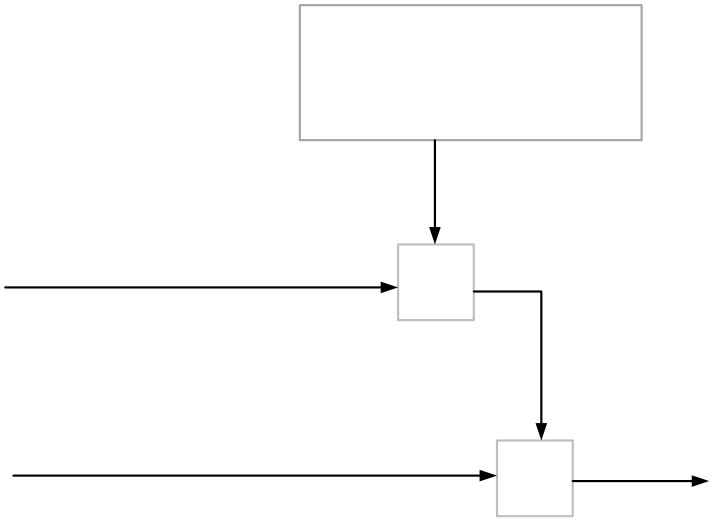

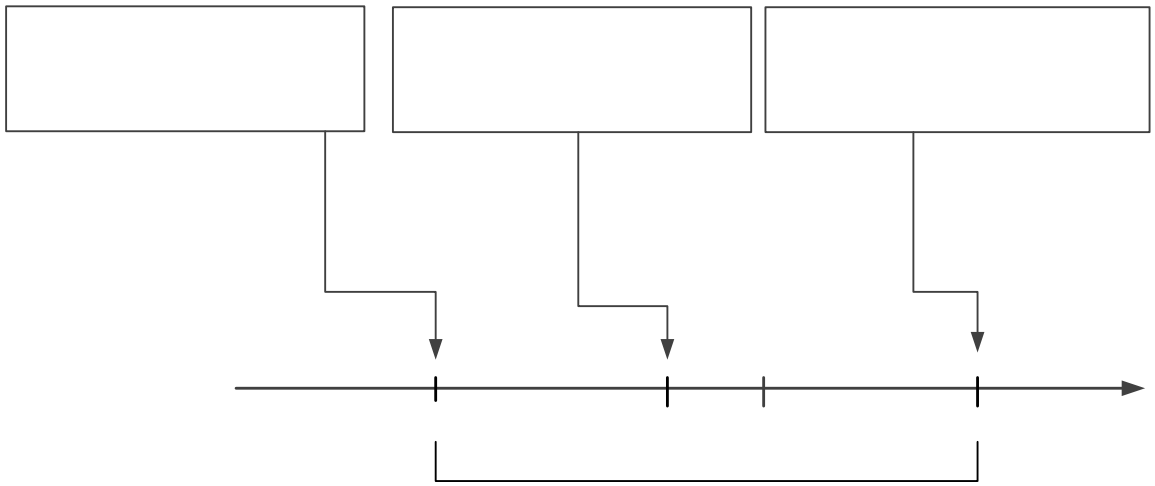

13 audioObject

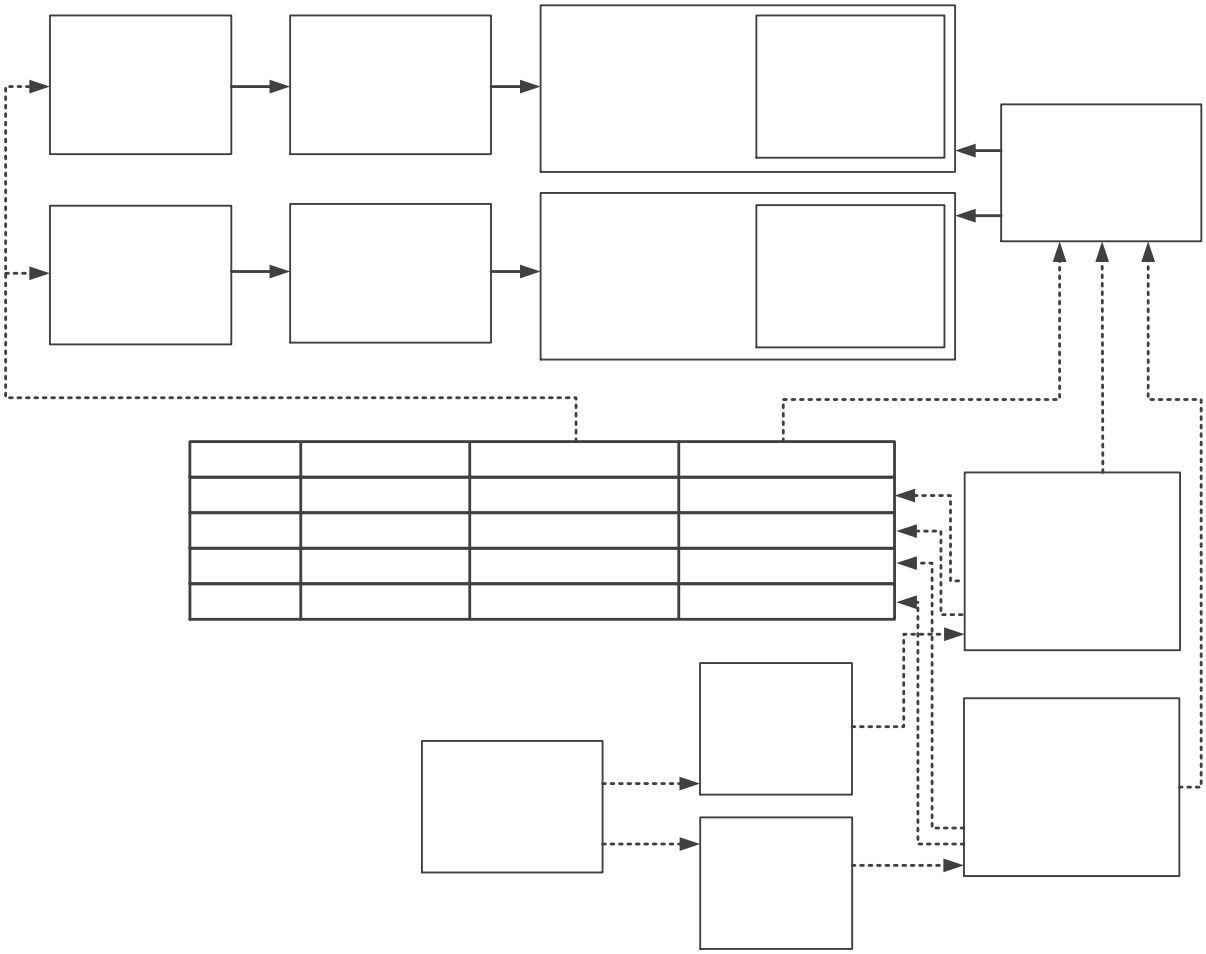

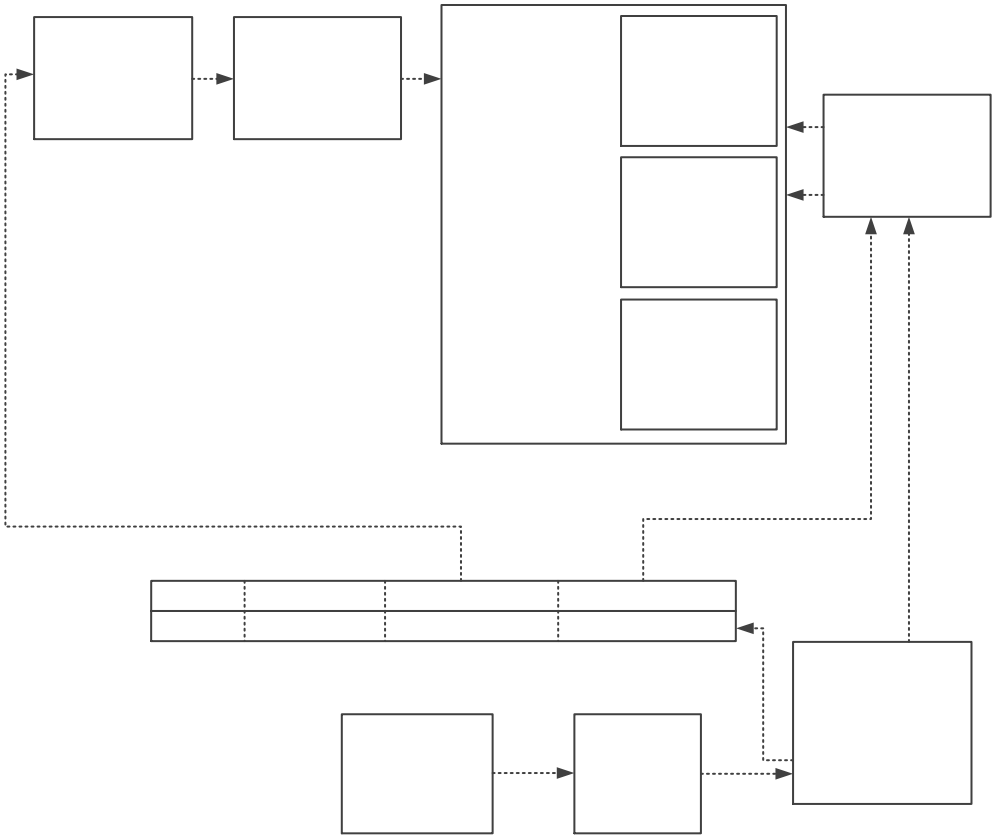

	ID		

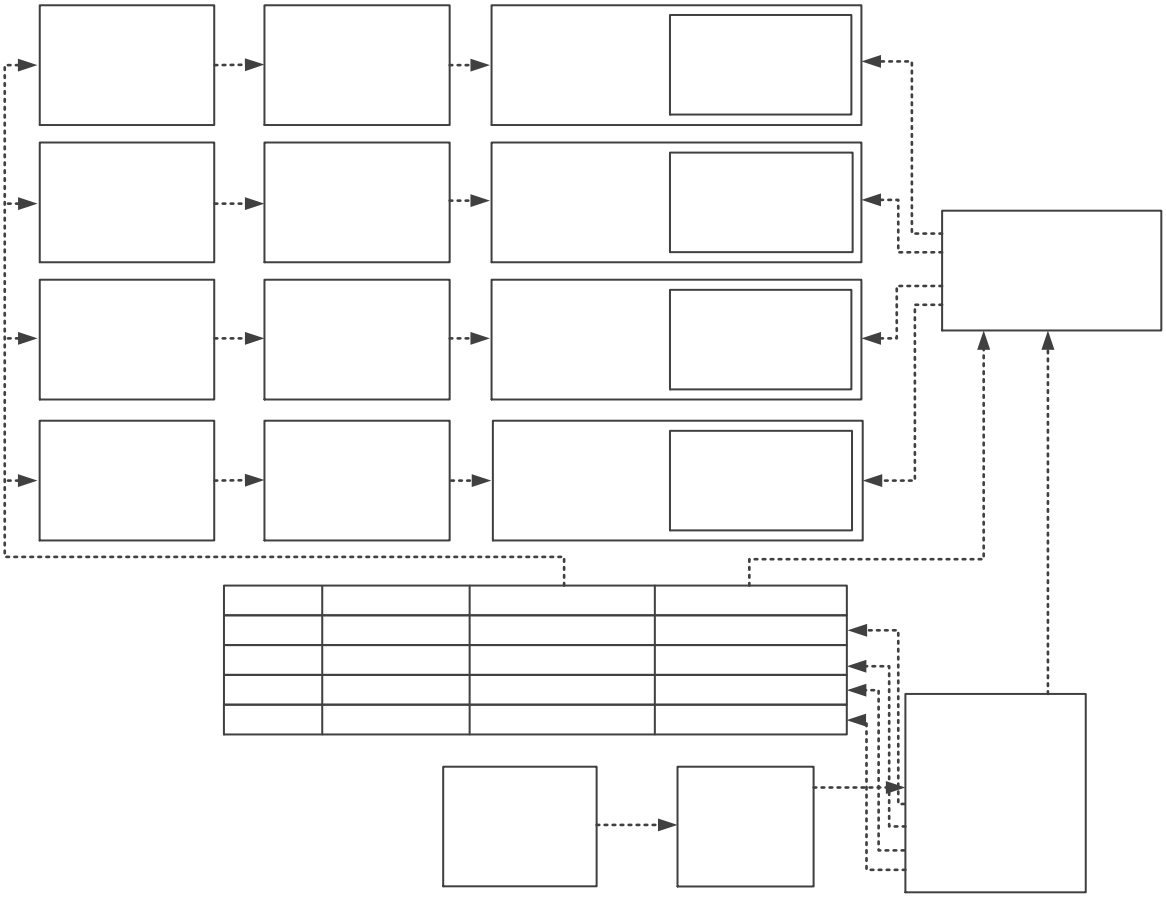

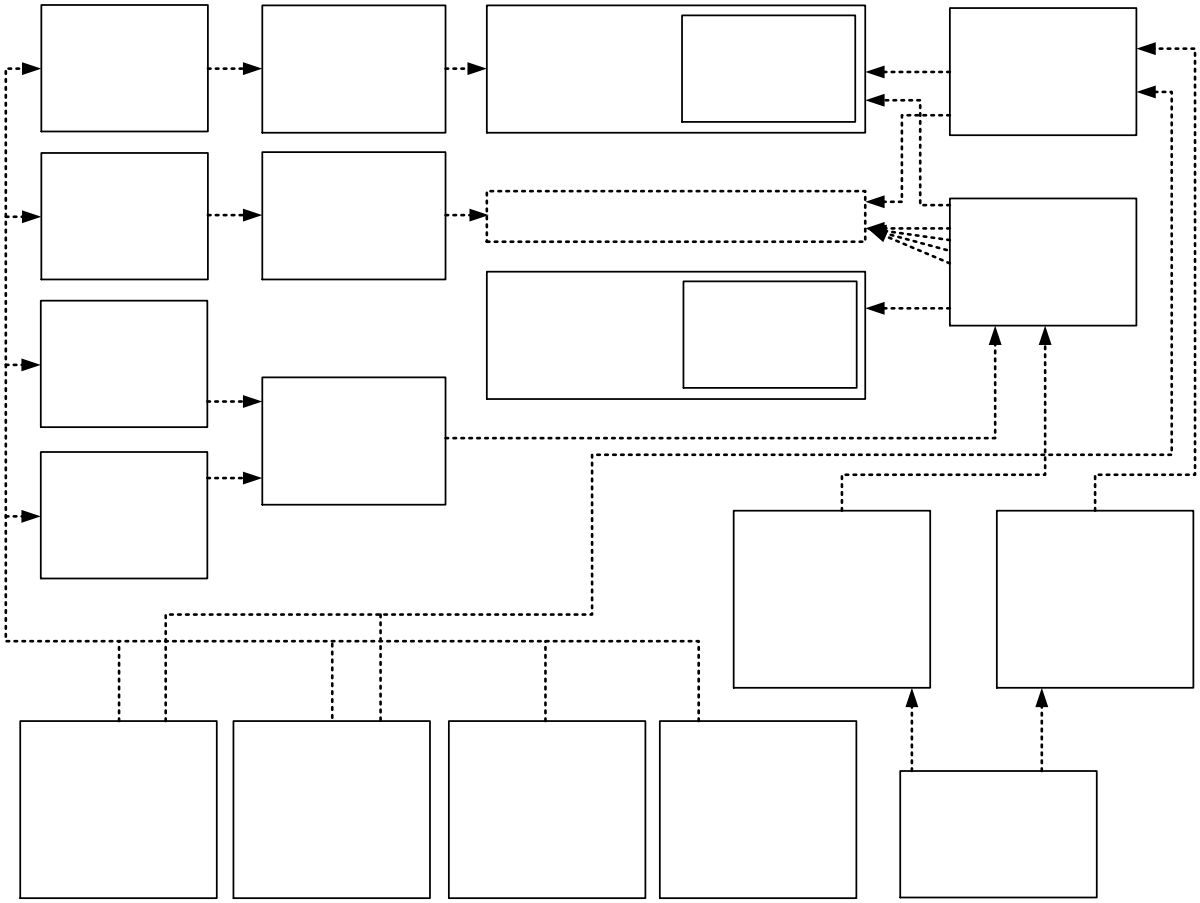

•					

	ID		

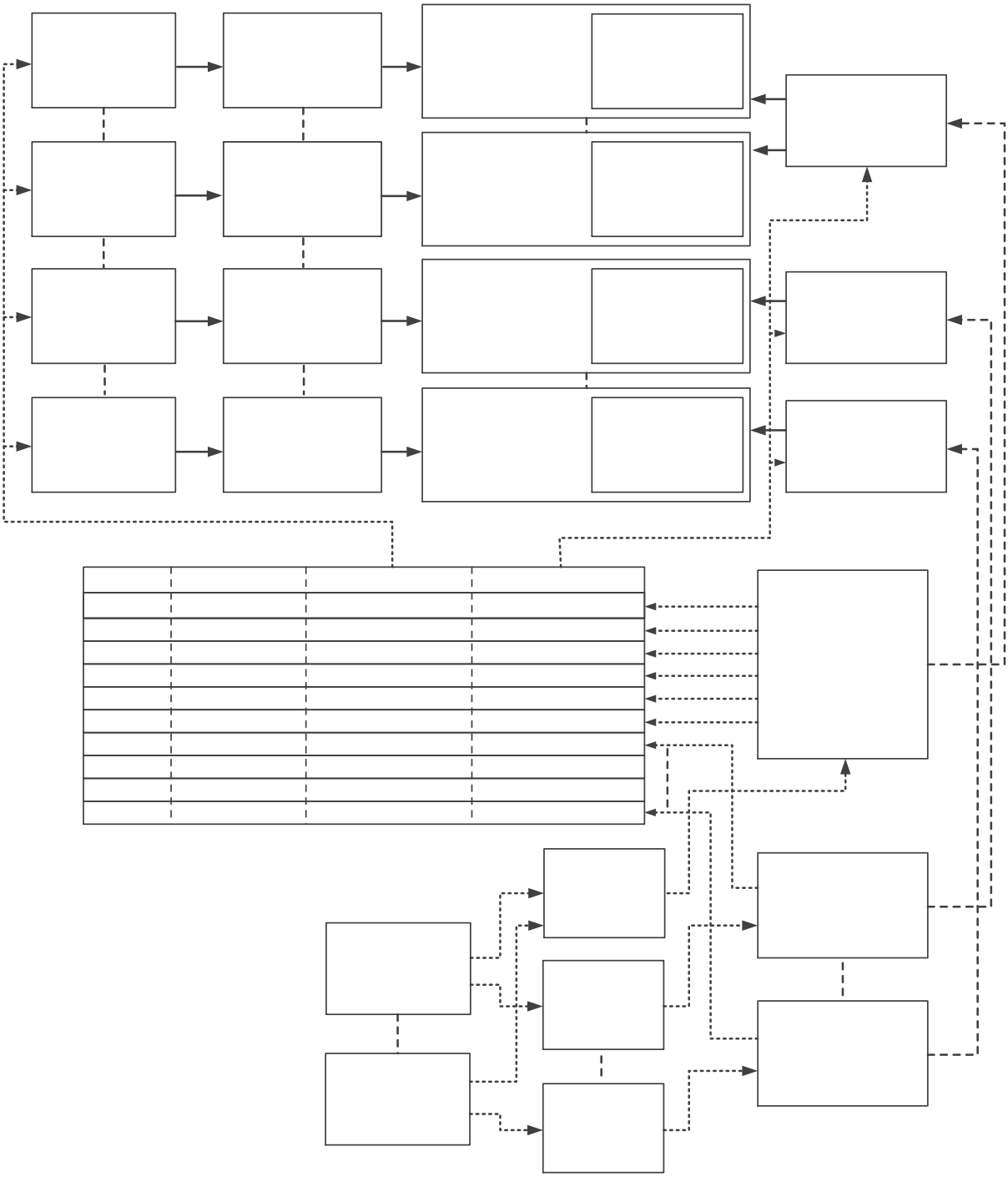
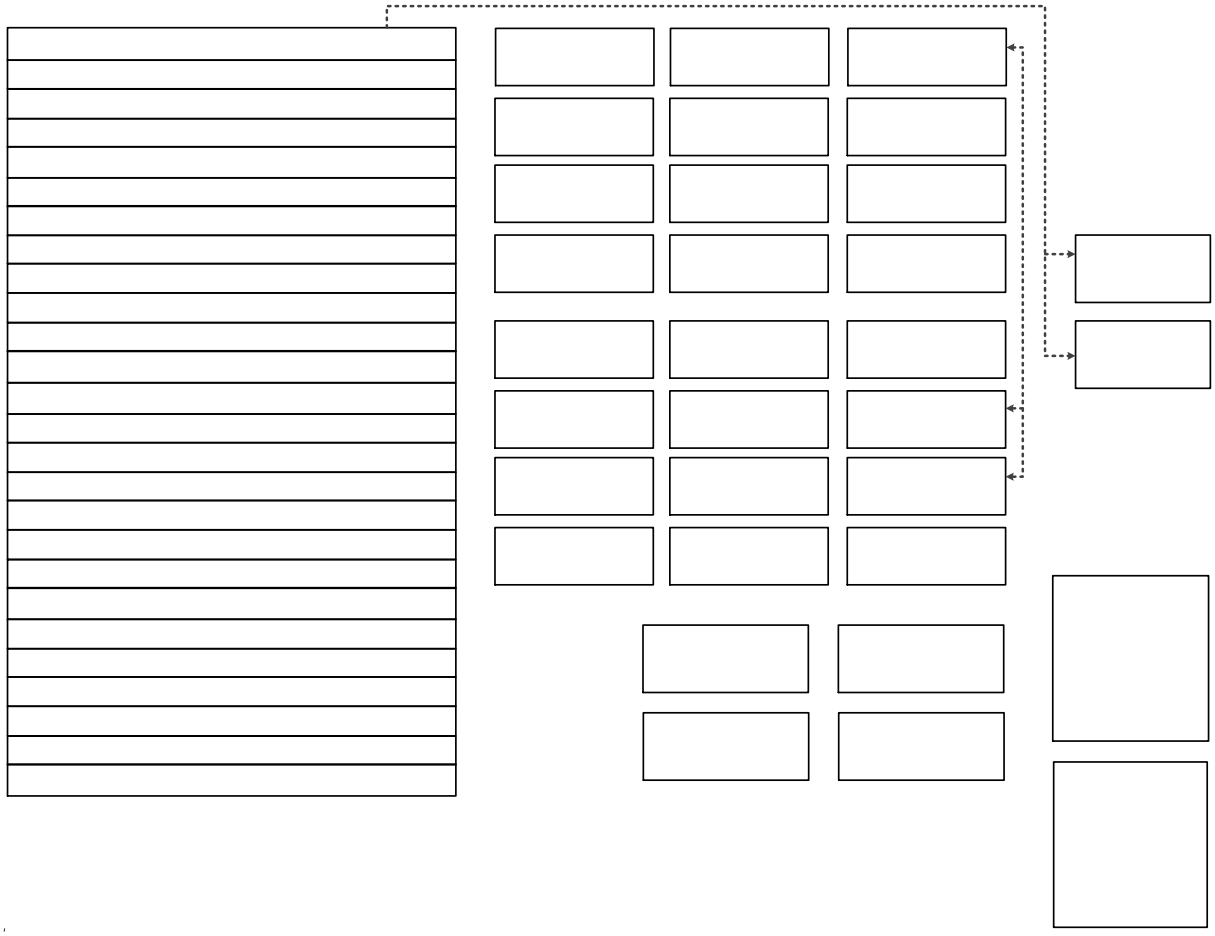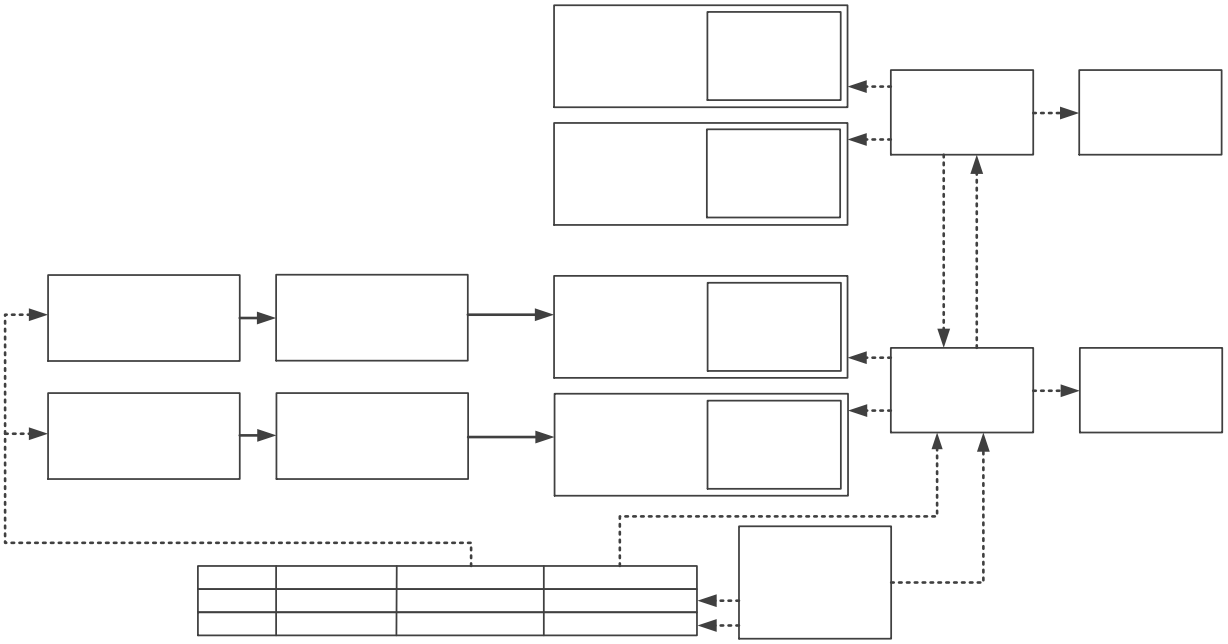
	ID